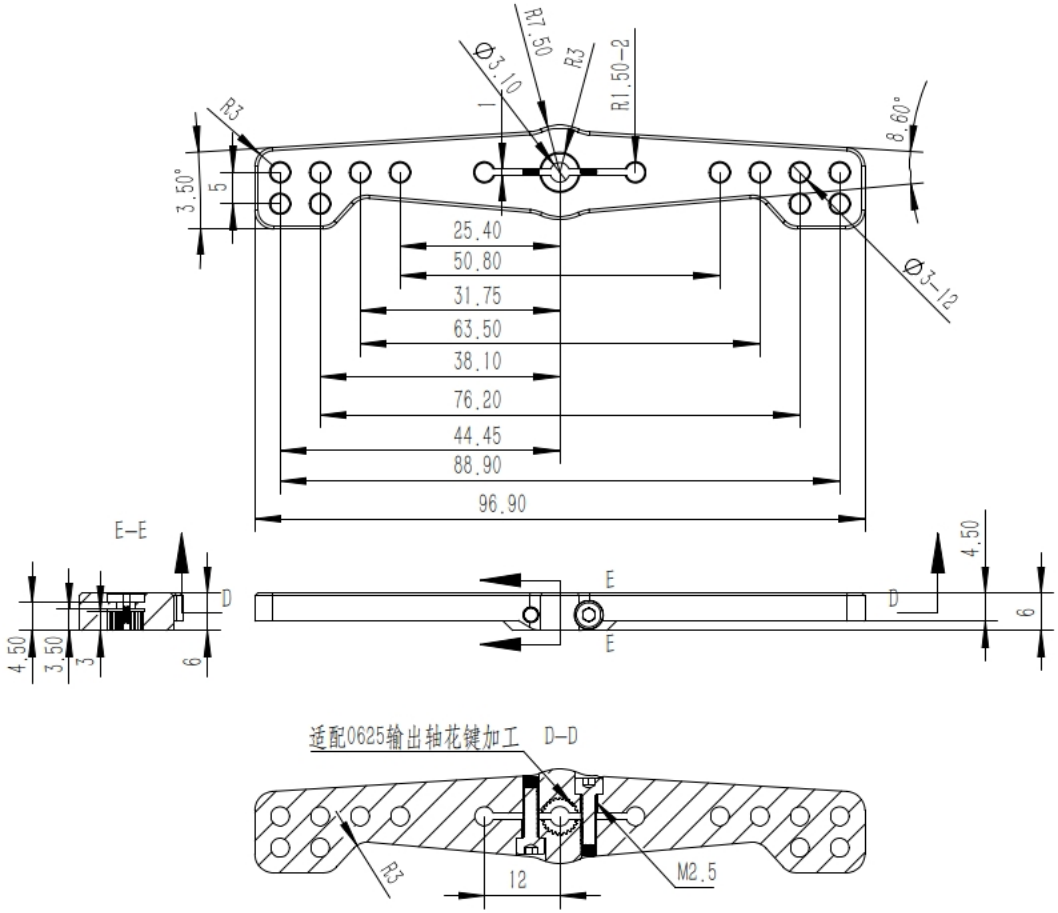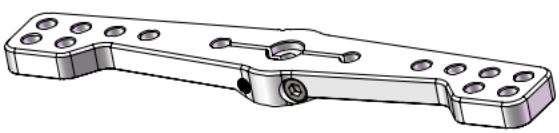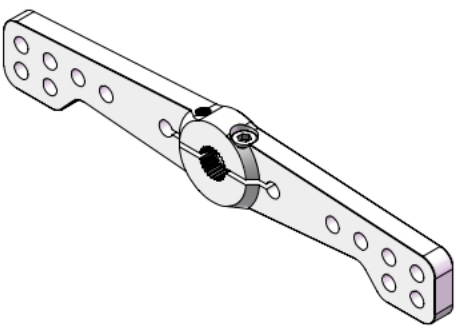
R7.50
R3
Ø3.10
1
R1.50-2
8.60°
R3
3.50°
5
25.40
50.80
31.75
63.50
38.10
76.20
44.45
88.90
96.90
Ø3-12
E-E
D
4.50
3.50
3
6
E
E
D
4.50
6
适配0625输出轴花键加工
D-D
R3
12
M2.5